Week02 – MCS51: Assembly for MCS-51, ESP32: Arduino Library
PC ____ รหัส _____ ชื่อ-สกุล _____

1. ETT-8052 Board: ป้อนโปรแกรมด้วยมือ + Run Single Step

- จากเอกสาร "PartA2-MicroP_All Lab01-08.pdf" หน้า 4 ตอนที่ 2
- จากโปรแกรม "90 E0 60 74 00 F0 74 FF F0 02 80 00" กำหนดให้โปรแกรมเริ่มทำงานที่ Address 8000H ให้ทำการแปลง Hex Code ให้เป็น Mnemonics Code บันทึกค่าในตาราง
- ปรับให้ทำงาน เพื่อแสดงค่า 0-F ที่ 7Segment 0E060H พร้อมทั้งทดสอบการทำงาน

Address	+0	+1	+2	Mnemonics Code	Operator, Operand	Comment
8000H	90	E0	60	MOV	DPTR, #0E060H	ให้ DPTR มีค่าเท่ากับ E060H
8003H	74					

2. ETT-8052 Board: ป้อมโปรแกรมผ่าน Serial Command + Single Step Run

- จงแปลงชุดคำสั่งแอสเซมบลีตอไปนี้ใหเปนภาษาเครื่องดวยการเปดตารางรหัสคำสั่ง
- ทดสอบด้วยการป้อน Hex Code ผ่าน Serial Terminal
- รันโปรแกรมแบบ Single Step เพื่อบันทึกค่า Register ต่างๆ ทีละ Step จากการรัน

	Addr.	+0	+1	+2	Description	PC	A	B	PSW	R5	R7
ORG 8000H					บันทึกค่าก่อนรัน	8000					
MOV R5, #25H	8000	7D	25		ให้ R5 มีค่าเป็น 25H	8002					
MOV R7, #34	8002										
MOV A, #0H											
ADD A, R5											
ADDC A, R7											
ADDC A, #12H											
MOV B, #0C3H											
SUBB A, B											
SJMP $		80	FE								
END											

MCS51: Show 0-F	MCS51: Show-Reg	MCS51: Blink ID	DHT22 + MAX7219	BH1705+TM1638

3. ETT-8052 Board: ป้อมโปรแกรมผ่าน Serial Command + GO Command Run
   - จาก “PartA2-MicroP_All Lab01-08.pdf” หน้า 10
   - ให้ทดสอบโปรแกรม Test3.Asm หน้า 18
   - ปรับโปรแกรมให้แสดงรหัสนักศึกษาที่ละตัวสลับกับดับทั้งหมด ที่ตำแหน่งเซ็กเม้นต์ขวาสุด
   - (Advance) หากอยากแสดงรหัส 6 ตัวท้ายจะปรับแก้โปรแกรมอย่างไร

4. อ่านอุณหภูมิและความชื้นที่จาก DHT22 แล้วแสดงค่าที่ MAX-7219
   - จาก “PartC -- 535203 Internet of Things .pdf” หน้า 96, หน้า 113
   - Install DHT-22 Library และทดสอบโปรแกรมตัวอย่าง
   - Install MAX7219 Library และทดสอบโปรแกรมตัวอย่าง
   - จากโปรแกรมที่ให้มา ปรับให้สามารถแสดงอุณหภูมิและความชื้นได้ (Hint: หน้า 118)

5. อ่านค่าความเข้มแสงจาก BH1750 แล้วแสดงค่าที่ TM-1638
   - Install BH1750 Library และทดสอบโปรแกรมตัวอย่าง
   - Install TM1638 Library และทดสอบโปรแกรมตัวอย่าง
   - จากโปรแกรมที่ให้มา ปรับให้สามารถแสดงความเข้มแสงได้

Mission-4

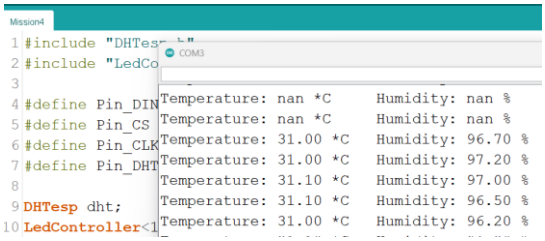


```
#include "DHTesp.h"
#include "LedController.hpp"
#define Pin_DIN 19 // D19
#define Pin_CS 18 // D18
#define Pin_CLK 5 // D5
#define Pin_DHT22 15 // D15
DHTesp dht;
LedController<1, 1> lc;
void setup() {
  Serial.begin(115200);
  lc = LedController<1, 1> (Pin_DIN, Pin_CLK, Pin_CS);
  lc.setIntensity(8);
  lc.clearMatrix();
  dht.setup(Pin_DHT22, DHTesp::DHT22);
}
void loop() {
  float h = dht.getHumidity();
  float t = dht.getTemperature();
  Serial.print("Temperature: ");        Serial.print(t); Serial.print(" *C\t");
  Serial.print("Humidity: ");           Serial.print(h); Serial.print(" %\n");
  int Tempp2 = 7;        int Tempp1 = 6;        int Tempp0 = 5;
  int Humi2 = 4;         int Humi1 = 3;         int Humi0 = 2;
  lc.setDigit(0, 7, Tempp2, false);
  lc.setDigit(0, 6, Tempp1, true);
  lc.setDigit(0, 5, Tempp0, false);
  lc.setRow(0, 4, B00001101); // Code=tabcdefgh
  lc.setDigit(0, 3, Humi2, false);
  lc.setDigit(0, 2, Humi1, true);
  lc.setDigit(0, 1, Humi0, false);
  lc.setRow(0, 0, B00010111); // Code=tabcdefgh
  delay(2000);
}
```

Mission-5

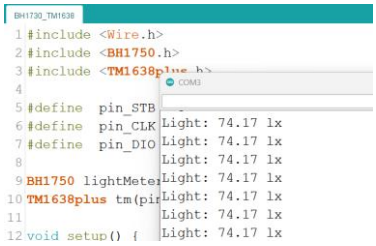


```
#include <Wire.h>
#include <BH1750.h>
#include <TM1638plus.h>
< ยังไม่สมบูรณ์ >

void setup() {
  Serial.begin(115200);
  < ยังไม่สมบูรณ์ >
}

void loop() {
  float Luxfloat = lightMeter.readLightLevel();
  Serial.print("Light: ");
  Serial.print(Luxfloat);
  Serial.println(" lx");
  int IntLux = (int)(Luxfloat * 100);
  int IntLux4 = IntLux % 10; IntLux /= 10;
  int IntLux3 = IntLux % 10; IntLux /= 10;
  int IntLux2 = IntLux % 10; IntLux /= 10;
  int IntLux1 = IntLux % 10; IntLux /= 10;
  int IntLux0 = IntLux % 10; IntLux /= 10;
  tm.reset();
  IntLux0 = Luxfloat < 100 ? ' ' - 0x30 : IntLux0;
  IntLux1 = Luxfloat < 10  ? ' ' - 0x30 : IntLux1;
  tm.displayASCII(0, 0x30 + IntLux0);
  tm.displayASCII(1, 0x30 + IntLux1);
  tm.displayASCIIwDot(2, 0x30 + IntLux2);
  tm.displayASCII(3, 0x30 + IntLux3);
  tm.displayASCII(4, 0x30 + IntLux4);
  tm.displayASCII(5, ' ');
  tm.displayASCII(6, 'L');
  tm.displayASCII(7, 'u');
  delay(2000);
}
```

Note

1. Mnemonic to HEX Code:

- จงแปลงชุดคำสั่งแอสเซมบลีตอไปนี้ให้เปนภาษาเครื่องดวยการเปดตารางรหัสคำสั่ง
- ทดสอบด้วยการป้อน Hex Code

			Addr.	+0	+1	+2	PC	PSW	A	B	30H	R0	R6	R7
	ORG	8600H					8600							
	MOV	A, #11H	8600											
	MOV	30H, #30D												
	MOV	B, 30H												
	MOV	R0, #11												
	MOV	R6, #66O												
	MOV	R7, #77H												
	ADD	A, R0												
	SUBB	A, R6												
	MOV	R7, B												
DELAY:	DJNZ	R7, DELAY												
	SJMP	$												

2. Hex to Mnemonic Code:

- อ้างอิง “PartA -- MCS51 Code Table.pdf”
- จาก Machine Code ที่ให้มา หากแปลคากลับจะได Assembly Code เปนอยางไร
- กำหนดสวนเริ่มตนโปรแกรมเปน 8000H

74 23 75 F0 45 78 67 7F 00 25 F0 D3 36 50 01 0F 53 90 89 AB F0 EF A3 F0 80 FE

Address	+0	+1	+2	Mnemonics Code	Operator, Operand	Comment
8000	74					

3. MCS-51 Assembly Code:

```
;Test1.Asm

        ORG     8600H
        MOV     A,#45H
        MOV     R0,#00H
        MOV     R1,#11H
        MOV     R2,#22H
        MOV     R3,#33H
        MOV     R4,#44H
        MOV     R5,#55H
        MOV     R6,#66H
        ADD     A,R2
        SUBB    A,R5
        MOV     R7,A

DELAY:  DJNZ    R7,DELAY
        SJMP    $

        END
```

```
;Test2.Asm

        ORG     8000H
LOOP:   MOV     DPTR,#E060H
        MOV     A,#00111111B
        MOVX    @DPTR,A
        MOV     A,#00000000B
        MOVX    @DPTR,A
        JMP     LOOP

        END
```

```
;Test3.Asm

                ORG     8000H
LOOP:           MOV     R0,#01H; Position 1st
                MOV     R1,#0FFH        ; Display All On
                CALL    DISP_OUT
                CALL    DELAY_500M

                MOV     R0,#01H; Position 1st
                MOV     R1,#000H        ; Display All Off
                CALL    DISP_OUT
                CALL    DELAY_500M
                JMP     LOOP

;***************************************************
;*      Display Digit_R0 by Value_R1
;***************************************************
DISP_OUT:       MOV     DPTR,#0E002H    ; Send Position
                MOV     A,R0
                MOVX    @DPTR,A
                MOV     DPTR,#0E001H    ; Send Value
                MOV     A,R1
                MOVX    @DPTR,A
                CLR     A
                DJNZ    Acc,$
                RET


;***************************************************
;*      Delay Subroutine
;***************************************************
DELAY_2SEC:     CALL    DELAY_1SEC      ; Delay 1 Sec
                CALL    DELAY_1SEC      ; Delay 1 Sec
                RET

DELAY_1SEC:     CALL    DELAY100MS      ; Delay 100 mSec
                CALL    DELAY100MS      ; Delay 100 mSec
                CALL    DELAY100MS      ; Delay 100 mSec
                CALL    DELAY100MS      ; Delay 100 mSec
                CALL    DELAY100MS      ; Delay 100 mSec
                CALL    DELAY100MS      ; Delay 100 mSec
                CALL    DELAY100MS      ; Delay 100 mSec
                CALL    DELAY100MS      ; Delay 100 mSec
                CALL    DELAY100MS      ; Delay 100 mSec
                CALL    DELAY100MS      ; Delay 100 mSec
                RET

DELAY_500M:     CALL    DELAY100MS      ; Delay 100 mSec
                CALL    DELAY100MS      ; Delay 100 mSec
                CALL    DELAY100MS      ; Delay 100 mSec
                CALL    DELAY100MS      ; Delay 100 mSec
                CALL    DELAY100MS      ; Delay 100 mSec
                RET

DELAY100MS:     MOV     R6,#200         ; 200 * 500 = 100mS
DLY100MS:       CALL    DELAY500U       ; Delay 500 MicroSec
                DJNZ    R6,DLY100MS
                RET

DELAY500U:      MOV     R5,#230         ;1 MC
                DJNZ    R5,$            ;(230*2)MC *12/11.0592
                RET                     ;  = 499uSec

                END
```

5. ESP-32 Add DHT-22 Library

- https://randomnerdtutorials.com/esp32-dht11-dht22-temperature-humidity-sensor-arduino-ide/

DHT sensor Library for ESPx by beegee_tokyo Version 1.19.0

```
#include "DHTesp.h"
#define pinDHT22 15
DHTesp dht;

void setup()
{
 Serial.begin(115200);
 Serial.println();
 String thisBoard = ARDUINO_BOARD;
 Serial.println(thisBoard);
 Serial.println("Status\tHumidity (%)\tTemperature (C)\t(F)\tHeatIndex (C)\t(F)");
 dht.setup(pinDHT22, DHTesp::DHT22);
}

void loop() {
 delay(dht.getMinimumSamplingPeriod());

 float humidity = dht.getHumidity();
 float temperature = dht.getTemperature();

 Serial.print(dht.getStatusString());
 Serial.print("\t");
 Serial.print(humidity, 1);
 Serial.print("\t\t");
 Serial.print(temperature, 1);
 Serial.print("\t\t");
 Serial.print(dht.toFahrenheit(temperature), 1);
 Serial.print("\t\t");
 Serial.print(dht.computeHeatIndex(temperature, humidity, false), 1);
 Serial.print("\t\t");
 Serial.println(dht.computeHeatIndex(dht.toFahrenheit(temperature), humidity, true), 1);
 delay(2000);
}
```

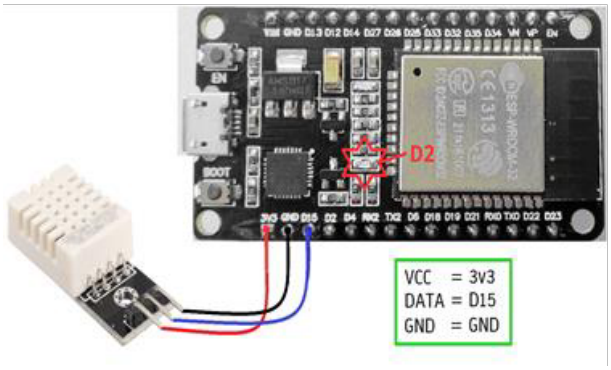

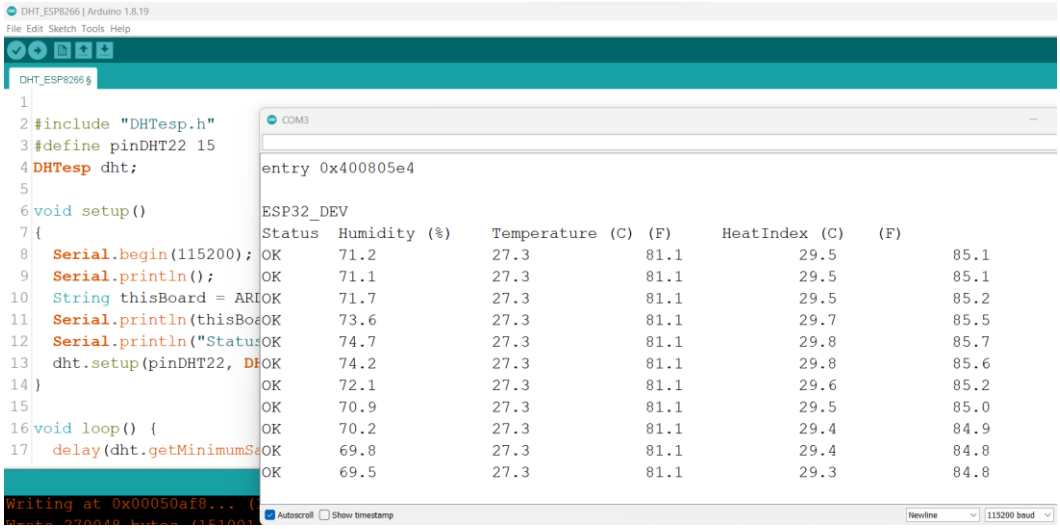

6. ESP-32 Add MAX-7219 Library

LedController

by **Noa Sakurajin** Version **2.0.2** **INSTALLED**

The better LedControl library for the MAX7219 and the MAX7221 Led display drivers. "!!Version 2.0.0 comes with a lot of changes plese check the readme on more information!! It can do everything LedControl can, works with more boards (like esp32) and makes working with LedMatricies easier. You can more your displayed data around, set whole segments and have way more symbols for 7-segment displays. If you still miss a feature just create a pull request and I will do my best to add it ASAP."

More info

LedController by Noa Sakurajin Version 2.0.2

```
#include "LedController.hpp"
#define Pin_DIN 19  // D19
#define Pin_CS 18   // D18
#define Pin_CLK 5   // D5

LedController<1, 1> lc;

void setup() {
  lc = LedController<1, 1>(Pin_DIN, Pin_CLK, Pin_CS);
  lc.setIntensity(8);
  lc.clearMatrix();
}
void loop()
{ lc.setDigit(0, 7, 1, false);
  lc.setDigit(0, 6, 2, false);
  lc.setDigit(0, 5, 3, false);
  lc.setDigit(0, 4, 4, false);
  lc.setDigit(0, 3, 5, false);
  lc.setDigit(0, 2, 6, false);
  lc.setDigit(0, 1, 7, false);
  lc.setDigit(0, 0, 8, false);
  delay(1000);
}
```

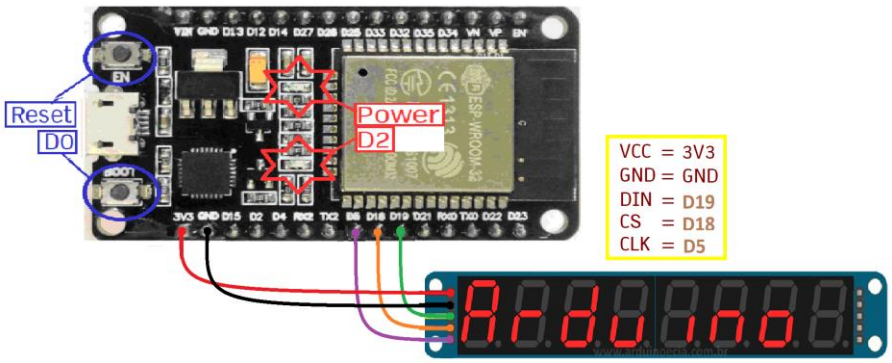

7. ESP-32 Add TM-1638 Library

TM1638plus

by **Gavin Lyons** Version **1.9.0** **INSTALLED**

TM1638plus is an Arduino library to control TM1638 seven segment modules. It supports push buttons, LEDs and the decimal pci features of these modules. Can display ASCII, Decimal, Hexadecimal and text strings. Small Memory footprint.

More info

TM1638plus by Gavin Lyons Version 1.9.0

```
#include <TM1638plus.h>
#define  pin_STB 21
#define  pin_CLK 19
#define  pin_DIO 18

TM1638plus tm(pin_STB, pin_CLK , pin_DIO);

void setup() {
  Serial.begin(115200);
  tm.displayBegin();
  tm.brightness(6);
}

void loop() {
  tm.reset();
  tm.displayText("-Arduino");
  delay(2000);

  tm.reset();
  tm.displayASCIIwDot(0, '2');
  tm.displayASCII(1, '3');
  tm.displayASCII(2, '4');
  tm.displayASCII(3, '2');
  delay(2000);

  tm.reset();
  tm.displayHex(0, 0);
  tm.displayHex(1, 1);
  tm.displayHex(2, 2);
  tm.displayHex(3, 3);
  tm.displayHex(4, 4);
  tm.displayHex(5, 5);
  tm.displayHex(6, 6);
  tm.displayHex(7, 7);
  delay(2000);

  tm.reset();
  tm.displayHex(0, 8);
  tm.displayHex(1, 9);
  tm.displayHex(2, 0x0A);
  tm.displayHex(3, 0x0B);
  tm.displayHex(4, 0x0C);
  tm.displayHex(5, 0x0D);
  tm.displayHex(6, 0x0E);
  tm.displayHex(7, 0x0F);
  delay(2000);
}
```

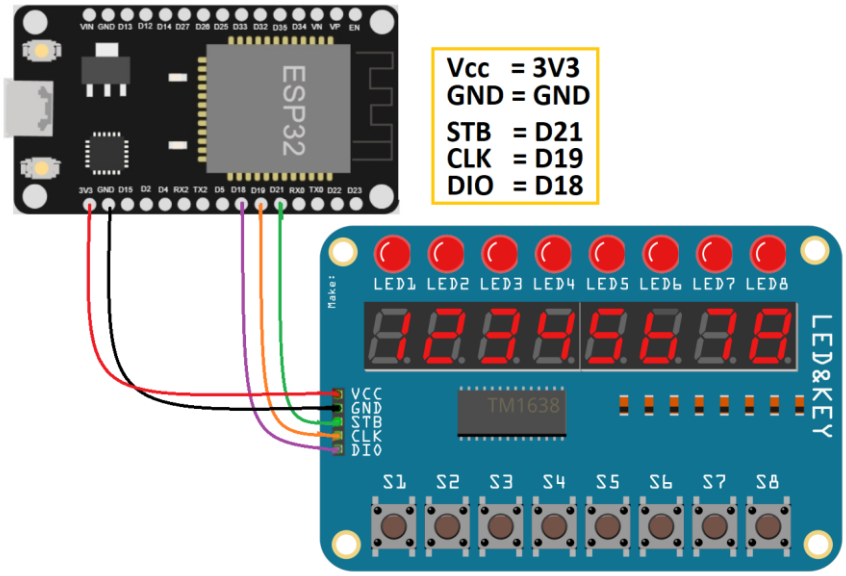

8. ESP-32 Add GY-302 (BH1750) Library

- https://randomnerdtutorials.com/esp32-bh1750-ambient-light-sensor/

BH1750

by **Christopher Laws** Version **1.3.0 INSTALLED**

Arduino library for the digital light sensor breakout boards containing the BH1750FVI IC Pretty simple and robust BH1750 libr
ESP8266 & ESP32 compatible.
More info

BH1750 by Christopher Laws Version 1.3.0

```
#include <Wire.h>
#include <BH1750.h>

BH1750 lightMeter;

void setup() {
  Serial.begin(115200);
  Wire.begin();
  lightMeter.begin();
  Serial.println(F("BH1750 Test begin"));
}

void loop() {
  float lux = lightMeter.readLightLevel();
  Serial.print("Light: ");
  Serial.print(lux);
  Serial.println(" lx");
  delay(1000);
}
```

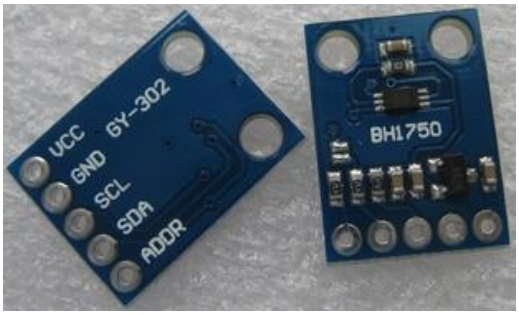

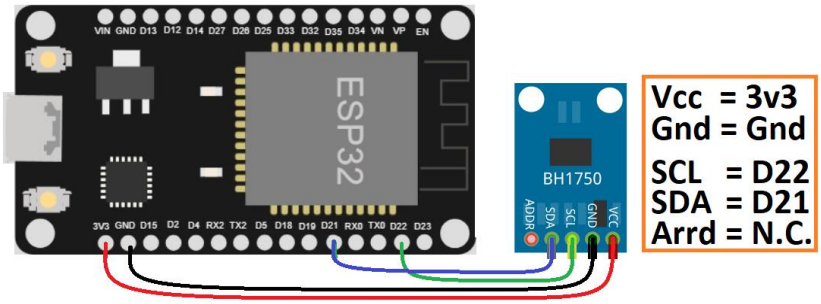

COM4

```
Light: 1417.50 lx
Light: 219.17 lx
Light: 99.17 lx
Light: 102.50 lx
Light: 106.67 lx
Light: 109.17 lx
Light: 109.17 lx
```

n-Byte

Table 11. Instruction Opcodes in Hexadecimal Order

Hex Code	Number of Bytes	Mnemonic	Operands
00	1	NOP No Operation	
01	2	AJMP	code addr
02 XX XX	3	LJMP	code addr Jump
03	1	RR	A
04	1	INC	A
05	2	INC	data addr
06	1	INC	@R0
07	1	INC	@R1
08	1	INC	R0
09	1	INC	R1
0A	1	INC	R2
0B	1	INC	R3
0C	1	INC	R4
0D	1	INC	R5
0E	1	INC	R6
0F	1	INC	R7
10	3	JBC	bit addr, code addr
11 XX	2	ACALL	code addr
12 XX XX	3	LCALL	code addr
13	1	RRC	A
14	1	DEC	A
15	2	DEC	data addr
16	1	DEC	@R0
17	1	DEC	@R1
18	1	DEC	R0
19	1	DEC	R1
1A	1	DEC	R2
1B	1	DEC	R3
1C	1	DEC	R4
1D	1	DEC	R5
1E	1	DEC	R6
1F	1	DEC	R7
20	3	JB	bit addr, code addr
21	2	AJMP	code addr
22	1	RET Return	
23	1	RL	A
24	2	ADD	A,#data
25	2	ADD	A,data addr
26	1	ADD	A,@R0
27	1	ADD	A,@R1
28	1	ADD	A,R0
29	1	ADD	A,R1
2A	1	ADD	A,R2
2B	1	ADD	A,R3
2C	1	ADD	A,R4
2D	1	ADD	A,R5
2E	1	ADD	A,R6
2F	1	ADD	A,R7
30	3	JNB	bit addr, code addr
31	2	ACALL	code addr
32	1	RETI Return form Interrupt	

Hex Code	Number of Bytes	Mnemonic	Operands
33	1	RLC	A
34	2	ADDC	A,#data
35	2	ADDC	A,data addr
36	1	ADDC	A,@R0
37	1	ADDC	A,@R1
38	1	ADDC	A,R0
39	1	ADDC	A,R1
3A	1	ADDC	A,R2
3B	1	ADDC	A,R3
3C	1	ADDC	A,R4
3D	1	ADDC	A,R5
3E	1	ADDC	A,R6
3F	1	ADDC	A,R7
40	2	JC	code addr
41	2	AJMP	code addr
42	2	ORL OR	data addr,A
43	3	ORL	data addr,#data
44	2	ORL	A,#data
45	2	ORL	A,data addr
46	1	ORL	A,@R0
47	1	ORL	A,@R1
48	1	ORL	A,R0
49	1	ORL	A,R1
4A	1	ORL	A,R2
4B	1	ORL	A,R3
4C	1	ORL	A,R4
4D	1	ORL	A,R5
4E	1	ORL	A,R6
4F	1	ORL	A,R7
50	2	JNC	code addr
51	2	ACALL Jump to no carry	code addr
52	2	ANL AND	data addr,A
53	3	ANL	data addr,#data
54	2	ANL	A,#data
55	2	ANL	A,data addr
56	1	ANL	A,@R0
57	1	ANL	A,@R1
58	1	ANL	A,R0
59	1	ANL	A,R1
5A	1	ANL	A,R2
5B	1	ANL	A,R3
5C	1	ANL	A,R4
5D	1	ANL	A,R5
5E	1	ANL	A,R6
5F	1	ANL	A,R7
60	2	JZ Jump If Acc zero	code addr
61	2	AJMP	code addr
62	2	XRL XOR	data addr,A
63	3	XRL	data addr,#data
64	2	XRL	A,#data
65	2	XRL	A,data addr

Table 11. Instruction Opcodes in Hexadecimal Order (Continued)

Hex Code	Number of Bytes	Mnemonic	Operands
66	1	XRL	A,@R0
67	1	XRL	A,@R1
68	1	XRL	A,R0
69	1	XRL	A,R1
6A	1	XRL	A,R2
6B	1	XRL	A,R3
6C	1	XRL	A,R4
6D	1	XRL	A,R5
6E	1	XRL	A,R6
6F	1	XRL	A,R7
70	2	JNZ	code addr
71	2	ACALL	code addr
72	2	ORL	C,bit addr
73	1	JMP	@A+DPTR
(74 XX)	2	MOV	A,#data เอาแน่ไม่ได้
75	3	MOV	data addr,#data
76	2	MOV	@R0,#data
77	2	MOV	@R1,#data
78	2	MOV	R0,#data
79	2	MOV	R1,#data
7A	2	MOV	R2,#data
7B	2	MOV	R3,#data
7C	2	MOV	R4,#data
7D	2	MOV	R5,#data
7E	2	MOV	R6,#data
7F	2	MOV	R7,#data
80	2	SJMP	code addr
81	2	AJMP	code addr
82	2	ANL	C,bit addr
83	1	MOVC	A,@A+PC
84	1	DIV หาร	AB
85 XXXX	3	MOV	data addr, data addr
86	2	MOV	data addr,@R0
87	2	MOV	data addr,@R1
88	2	MOV	data addr,R0
89	2	MOV	data addr,R1
8A	2	MOV	data addr,R2
8B	2	MOV	data addr,R3
8C	2	MOV	data addr,R4
8D	2	MOV	data addr,R5
8E	2	MOV	data addr,R6
8F	2	MOV	data addr,R7
90	3	MOV	DPTR,#data
91	2	ACALL	code addr
92	2	MOV	bit addr,C
93	1	MOVC	A,@A+DPTR
94	2	SUBB ลบ	A,#data
95	2	SUBB	A,data addr
96	1	SUBB	A,@R0
97	1	SUBB	A,@R1
98	1	SUBB	A,R0
99	1	SUBB	A,R1
9A	1	SUBB	A,R2
9B	1	SUBB	A,R3
9C	1	SUBB	A,R4
9D	1	SUBB	A,R5
9E	1	SUBB	A,R6
9F	1	SUBB	A,R7
A0	2	ORL	C,/bit addr
A1	2	AJMP	code addr
A2	2	MOV	C,bit addr
A3	1	INC	DPTR
A4	1	MUL คูณ	AB
A5		reserved	
A6	2	MOV	@R0,data addr
A7	2	MOV	@R1,data addr
A8	2	MOV	R0,data addr
A9	2	MOV	R1,data addr
AA	2	MOV	R2,data addr
AB	2	MOV	R3,data addr
AC	2	MOV	R4,data addr
AD	2	MOV	R5,data addr
AE	2	MOV	R6,data addr
AF	2	MOV	R7,data addr
B0	2	ANL	C,/bit addr
B1	2	ACALL	code addr
B2	2	CPL	bit addr
B3	1	CPL	C
B4	3	CJNE	A,#data,code addr
B5	3	CJNE	A,data addr,code addr
B6	3	CJNE	@R0,#data,code addr
B7	3	CJNE	@R1,#data,code addr
B8	3	CJNE	R0,#data,code addr
B9	3	CJNE	R1,#data,code addr
BA	3	CJNE	R2,#data,code addr
BB	3	CJNE	R3,#data,code addr
BC	3	CJNE	R4,#data,code addr
BD	3	CJNE	R5,#data,code addr
BE	3	CJNE	R6,#data,code addr
BF	3	CJNE	R7,#data,code addr
C0	2	PUSH ใส่ในสต	data addr
C1	2	AJMP	code addr
C2	2	CLR	bit addr
C3	1	CLR	C
C4	1	SWAP	A เปลี่ยนค่า 3F → F3
C5	2	XCH	A,data addr
C6	1	XCH	A,@R0
C7	1	XCH	A,@R1
C8	1	XCH แลกค่า	A,R0
C9	1	XCH	A,R1
CA	1	XCH	A,R2
CB	1	XCH	A,R3

Table 11. Instruction Opcodes in Hexadecimal Order (Continued)

Hex Code	Number of Bytes	Mnemonic	Operands
CC	1	XCH	A,R4
CD	1	XCH	A,R5
CE	1	XCH	A,R6
CF	1	XCH	A,R7
D0	2	POP	data addr
D1	2	ACALL	code addr
D2	2	SETB	bit addr
D3	1	SETB	C
D4	1	DA	A
D5	3	DJNZ	data addr,code addr
D6	1	XCHD	A,@R0
D7	1	XCHD	A,@R1
D8	2	DJNZ	R0,code addr
D9	2	DJNZ	R1,code addr
DA	2	DJNZ	R2,code addr
DB	2	DJNZ	R3,code addr
DC	2	DJNZ	R4,code addr
DD	2	DJNZ	R5,code addr
DE	2	DJNZ	R6,code addr
DF	2	DJNZ	R7,code addr
E0	1	MOVX	A,@DPTR
E1	2	AJMP	code addr
E2	1	MOVX	A,@R0
E3	1	MOVX	A,@R1
E4	1	CLR	A
E5	2	MOV	A,data addr
E6	1	MOV	A,@R0
E7	1	MOV	A,@R1
E8	1	MOV	A,R0
E9	1	MOV	A,R1
EA	1	MOV	A,R2
EB	1	MOV	A,R3
EC	1	MOV	A,R4
ED	1	MOV	A,R5
EE	1	MOV	A,R6
EF	1	MOV	A,R7
F0	1	MOVX	@DPTR,A
F1	2	ACALL	code addr
F2	1	MOVX	@R0,A
F3	1	MOVX	@R1,A
F4	1	CPL	A
F5	2	MOV	data addr,A
F6	1	MOV	@R0,A
F7	1	MOV	@R1,A
F8	1	MOV	R0,A
F9	1	MOV	R1,A
FA	1	MOV	R2,A
FB	1	MOV	R3,A
FC	1	MOV	R4,A
FD	1	MOV	R5,A
FE	1	MOV	R6,A
FF	1	MOV	R7,A

รหัสคำสั่งนีโมนิค ของ MCS-51 ตามลำดับตัวอักษร

MNEMONIC	OPERANDS	OPCODE	Cycles
ACALL	addr11	11 aaa	2
		31 aaa	2
		51 aaa	2
		71 aaa	2
		91 aaa	2
		B1 aaa	2
		D1 aaa	2
		F1 aaa	2
ADD	A,#data	24 nn	1
ADD	A,@R0	26	1
ADD	A,@R1	27	1
ADD	A,addr8	25 aa	1
ADD	A,R0	28	1
ADD	A,R1	29	1
ADD	A,R2	2A	1
ADD	A,R3	2B	1
ADD	A,R4	2C	1
ADD	A,R5	2D	1
ADD	A,R6	2E	1
ADD	A,R7	2F	1
ADDC	A,#data	34 nn	1
ADDC	A,@R0	36	1
ADDC	A,@R1	37	1
ADDC	A,addr8	35 aa	1
ADDC	A,R0	38	1
ADDC	A,R1	39	1
ADDC	A,R2	3A	1
ADDC	A,R3	3B	1
ADDC	A,R4	3C	1
ADDC	A,R5	3D	1
ADDC	A,R6	3E	1
ADDC	A,R7	3F	1
AJMP	addr11	01 aaa	2
		21 aaa	2
		41 aaa	2
		61 aaa	2
		81 aaa	2
		A1 aaa	2
		C1 aaa	2
		E1 aaa	2
ANL	A,#data	54 nn	1
ANL	A,@R0	56	1
ANL	A,@R1	57	1
ANL	A,addr8	55 aa	1
ANL	A,R0	58	1
ANL	A,R1	59	1
ANL	A,R2	5A	1
ANL	A,R3	5B	1
ANL	A,R4	5C	1
ANL	A,R5	5D	1
ANL	A,R6	5E	1
ANL	A,R7	5F	1
ANL	C,bit	B0 bb	2
ANL	C,/bit	82 bb	2
ANL	addr8,#data	53 aa nn	2
ANL	addr8,A	52 aa	1

MNEMONIC	OPERANDS	OPCODE	Cycles
CJNE	@R0,#data,rel	B6 nn rr	2
CJNE	@R0,#data,rel	B7 nn rr	2
CJNE	A,#data,rel	B4 nn rr	2
CJNE	A,addr8,rel	B5 dd rr	2
CJNE	R0,#data,rel	B8 nn rr	2
CJNE	R1,#data,rel	B9 nn rr	2
CJNE	R2,#data,rel	BA nn rr	2
CJNE	R3,#data,rel	BB nn rr	2
CJNE	R4,#data,rel	BC nn rr	2
CJNE	R5,#data,rel	BD nn rr	2
CJNE	R6,#data,rel	BE nn rr	2
CJNE	R7,#data,rel	BF nn rr	2
CLR	A	E4	1
CLR	bit	C2 bb	1
CLR	C	C3	1
CPL	A	F4	1
CPL	bit	B2 bb	1
CPL	C	B3	1
DA	A	D4	1
DEC	@R0	16	1
DEC	@R1	17	1
DEC	A	14	1
DEC	addr8	15 aa	1
DEC	R0	18	1
DEC	R1	19	1
DEC	R2	1A	1
DEC	R3	1B	1
DEC	R4	1C	1
DEC	R5	1D	1
DEC	R6	1E	1
DEC	R7	1F	1
DIV	AB	84	4
DJNZ	addr8,rel	D5 aa rr	2
DJNZ	R0,rel	D8 rr	2
DJNZ	R1,rel	D9 rr	2
DJNZ	R2,rel	DA rr	2
DJNZ	R3,rel	DB rr	2
DJNZ	R4,rel	DC rr	2
DJNZ	R5,rel	DD rr	2
DJNZ	R6,rel	DE rr	2
DJNZ	R7,rel	DF rr	2
INC	@R0	06	1
INC	@R1	07	1
INC	A	04	1
INC	addr8	05 aa	1
INC	DPTR	A3	2
INC	R0	08	1
INC	R1	09	1
INC	R2	0A	1
INC	R3	0B	1
INC	R4	0C	1
INC	R5	0D	1
INC	R6	0E	1
INC	R7	OF	1

MNEMONIC	OPERANDS	OPCODE	Cycles
JB	bit,rel	20 bb rr	2
JBC	bit,rel	10 bb rr	2
JC	rel	40 rr	2
JMP	@A+DPTR	73	2
JNB	bit,rel	30 bb rr	2
JNC	rel	50 rr	2
JNZ	rel	70 rr	2
JZ	rel	60 rr	2
LCALL	addr16	12 aaaa	2
LJMP	addr16	02 aaaa	2
MOV	@R0,#data	76 nn	1
MOV	@R0,A	F6	1
MOV	@R0,addr8	A7 aa	2
MOV	@R1,#data	77 nn	1
MOV	@R1,A	F7	1
MOV	@R1,addr8	A7 aa	2
MOV	A,#data	74 nn	1
MOV	A,@R0	E6	1
MOV	A,@R1	E7	1
MOV	A,addr8	E5 aa	1
MOV	A,R0	E8	1
MOV	A,R1	E9	1
MOV	A,R2	EA	1
MOV	A,R3	EB	1
MOV	A,R4	EC	1
MOV	A,R5	ED	1
MOV	A,R6	EE	1
MOV	A,R7	EF	1
MOV	bit,C	92 bb	2
MOV	C,bit	A2 bb	1
MOV	addr8,#data	75 aa nn	2
MOV	addr8,@R0	86 aa	2
MOV	addr8,@R1	87 aa	2
MOV	addr8,A	F5 aa	1
MOV	addr8,addr8	85 aa aa	2
MOV	addr8,R0	88 aa	2
MOV	addr8,R1	89 aa	2
MOV	addr8,R2	8A aa	2
MOV	addr8,R3	8B aa	2
MOV	addr8,R4	8C aa	2
MOV	addr8,R5	8D aa	2
MOV	addr8,R6	8E aa	2
MOV	addr8,R7	8F aa	2
MOV	DPTR,#data	90 nnnn	2
MOV	R0,#data	78 nn	1
MOV	R1,#data	79 nn	1
MOV	R2,#data	7A nn	1
MOV	R3,#data	7B nn	1
MOV	R4,#data	7C nn	1
MOV	R5,#data	7D nn	1
MOV	R6,#data	7E nn	1
MOV	R7,#data	7F nn	1
MOV	R0,A	F8	1
MOV	R1,A	F9	1
MOV	R2,A	FA	1
MOV	R3,A	FB	1
MOV	R4,A	FC	1
MOV	R5,A	FD	1
MOV	R6,A	FE	1
MOV	R7,A	FF	1

MNEMONIC	OPERANDS	OPCODE	Cycles
MOV	R0,addr8	A8 aa	2
MOV	R1,addr8	A9 aa	2
MOV	R2,addr8	AA aa	2
MOV	R3,addr8	AB aa	2
MOV	R4,addr8	AC aa	2
MOV	R5,addr8	AD aa	2
MOV	R6,addr8	AE aa	2
MOV	R7,addr8	AF aa	2
MOVC	A,@A+DPTR	93	2
MOVC	A,@A+PC	83	2
MOVX	@DPTR,A	F0	2
MOVX	@R0,A	F2	2
MOVX	@R1,A	F3	2
MOVX	A,@DPTR	E0	2
MOVX	A,@R0	E2	2
MOVX	A,@R1	E3	2
MUL	AB	A4	4
NOP		00	1
ORL	A,#data	44 nn	1
ORL	A,@R0	46	1
ORL	A,@R1	47	1
ORL	A,addr8	45 aa	1
ORL	A,R0	48	1
ORL	A,R1	49	1
ORL	A,R2	4A	1
ORL	A,R3	4B	1
ORL	A,R4	4C	1
ORL	A,R5	4D	1
ORL	A,R6	4E	1
ORL	A,R7	4F	1
ORL	C,/bit	A0 bb	2
ORL	C,bit	72 bb	2
ORL	addr8,#data	43 aa nn	2
ORL	addr8,A	42 aa	1
POP	addr8	D0 aa	2
PUSH	addr8	C0 aa	2
RET		22	2
RETI		32	2
RL	A	23	1
RLC	A	33	1
RR	A	03	1
RRC	A	13	1
SETB	bit	D2 bb	1
SETB	C	D3	1
SJMP	rel	80 rr	2

MNEMONIC	OPERANDS	OPCODE	Cycles
SUBB	A,#data	94 nn	1
SUBB	A,@R0	96	1
SUBB	A,@R1	97	1
SUBB	A,addr8	95 aa	1
SUBB	A,R0	98	1
SUBB	A,R1	99	1
SUBB	A,R2	9A	1
SUBB	A,R3	9B	1
SUBB	A,R4	9C	1
SUBB	A,R5	9D	1
SUBB	A,R6	9E	1
SUBB	A,R7	9F	1
SWAP	A	C4	1
XCH	A,@R0	C6	1
XCH	A,@R1	C7	1
XCH	A,addr8	C5 aa	1
XCH	A,R0	C8	1
XCH	A,R1	C9	1
XCH	A,R2	CA	1
XCH	A,R3	CB	1
XCH	A,R4	CC	1
XCH	A,R5	CD	1
XCH	A,R6	CE	1
XCH	A,R7	CF	1
XCHD	A,@R0	D6	1
XCHD	A,@R1	D7	1
XRL	A,#data	64 nn	1
XRL	A,@R0	66	1
XRL	A,@R1	67	1
XRL	A,addr8	65 aa	1
XRL	A,R0	68	1
XRL	A,R1	69	1
XRL	A,R2	6A	1
XRL	A,R3	6B	1
XRL	A,R4	6C	1
XRL	A,R5	6D	1
XRL	A,R6	6E	1
XRL	A,R7	6F	1
XRL	addr8,#data	63 aa nn	2
XRL	addr8,A	62 aa	1

Remarks:

addr8 = 00H ~ 0FFH
addr11 = 0000H ~ 07FFH
addr16 = 0000H ~ 0FFFFH
rel = 00H ~ 0FFH
#data = #00H ~ #0FFH
bit = bit address = 00H ~ 0FFH

	FLAG				FLAG
	C	OV	AC		C OV AC
ADD	X	X	X	SETB C	1
ADDC	X	X	X	CLR C	0
SUBB	X	X	X	CPL C	X
MUL	0	X		ANL C, bit	X
DIV	0	X		ANL C, /bit	X
DA	X			ORL C, bit	X
RRC	X			ORL C, /bit	X
RLC	X			MOV C, bit	X
				CJNE	X

4. ETT ET-8052 Ver2 Board

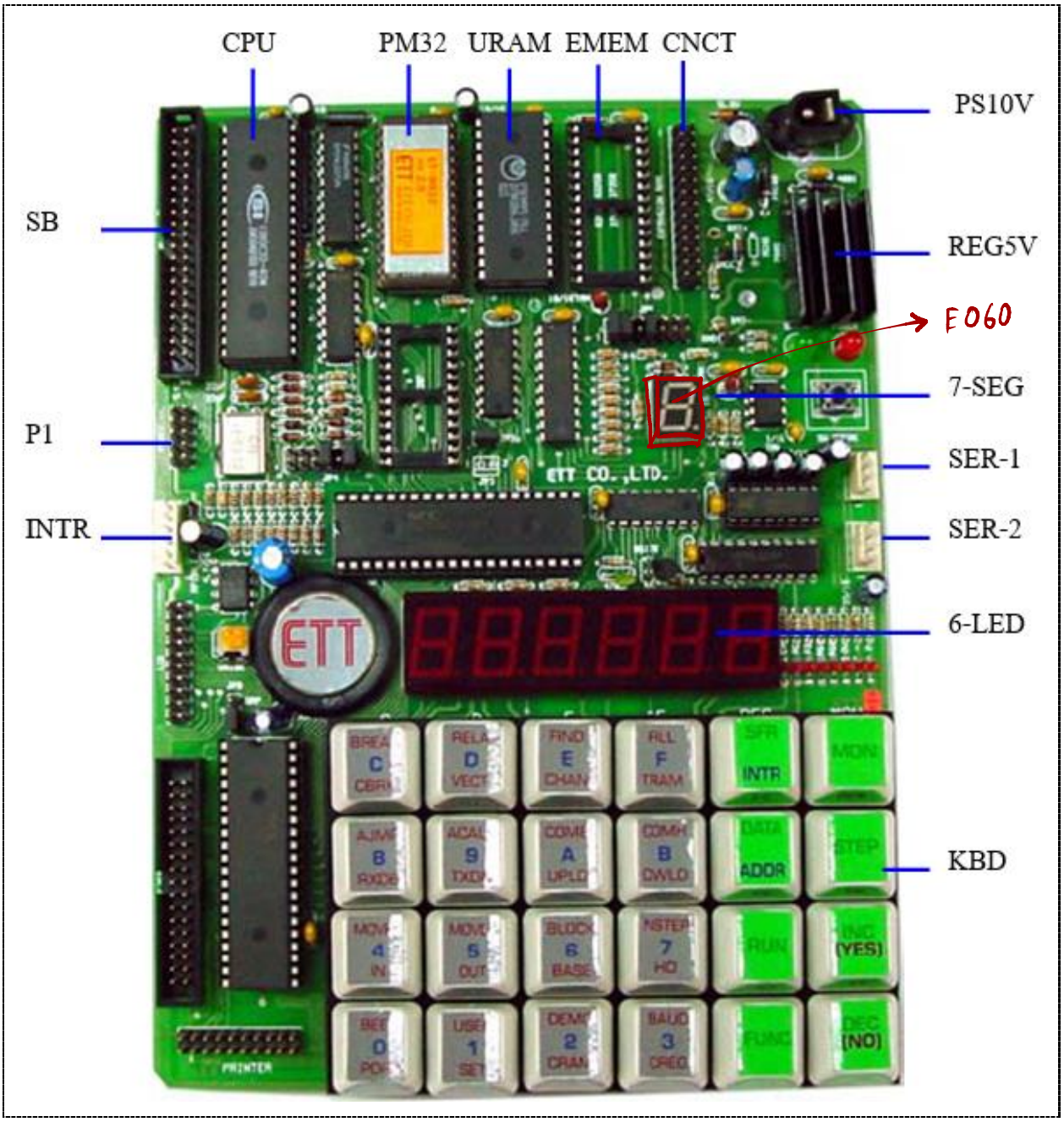

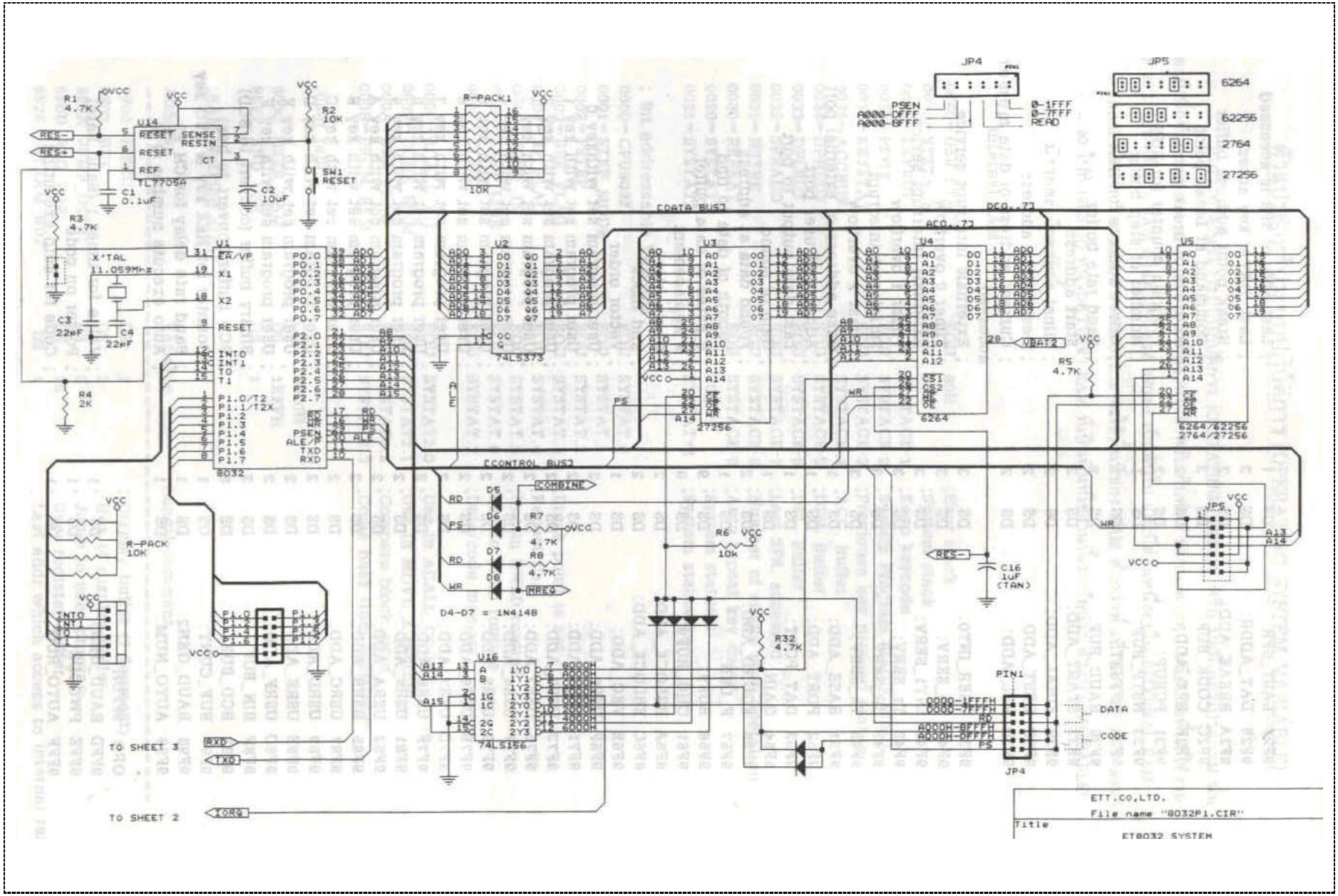
JP4
JP5
6264
62256
2764
27256
PSEN
A000-DFFF
A000-BFFF
0-1FFF
0-7FFF
READ
R1 4.7K
R2 10K
R3 4.7K
R4 2K
R5 4.7K
R6 10K
R7 4.7K
R8 4.7K
R32 4.7K
C1 0.1uF
C2 10uF
C3 22pF
C4 22pF
C16 1uF (TAN)
X'TAL 11.059MHz
SW1 RESET
TL7705A
R-PACK1 10K
R-PACK 10K
U1 8032
U2 74LS373
U3 27256
U4 6264
U5 6264/62256 2764/27256
U16 74LS156
[DATA BUS]
[CONTROL BUS]
COMBINE
MREQ
D4-D7 = 1N4148
TO SHEET 3
TO SHEET 2
RXD
TXD
IORQ
PIN1
DATA
CODE
ETT.CO,LTD.
File name "8032P1.CIR"
Title
ET8032 SYSTEM

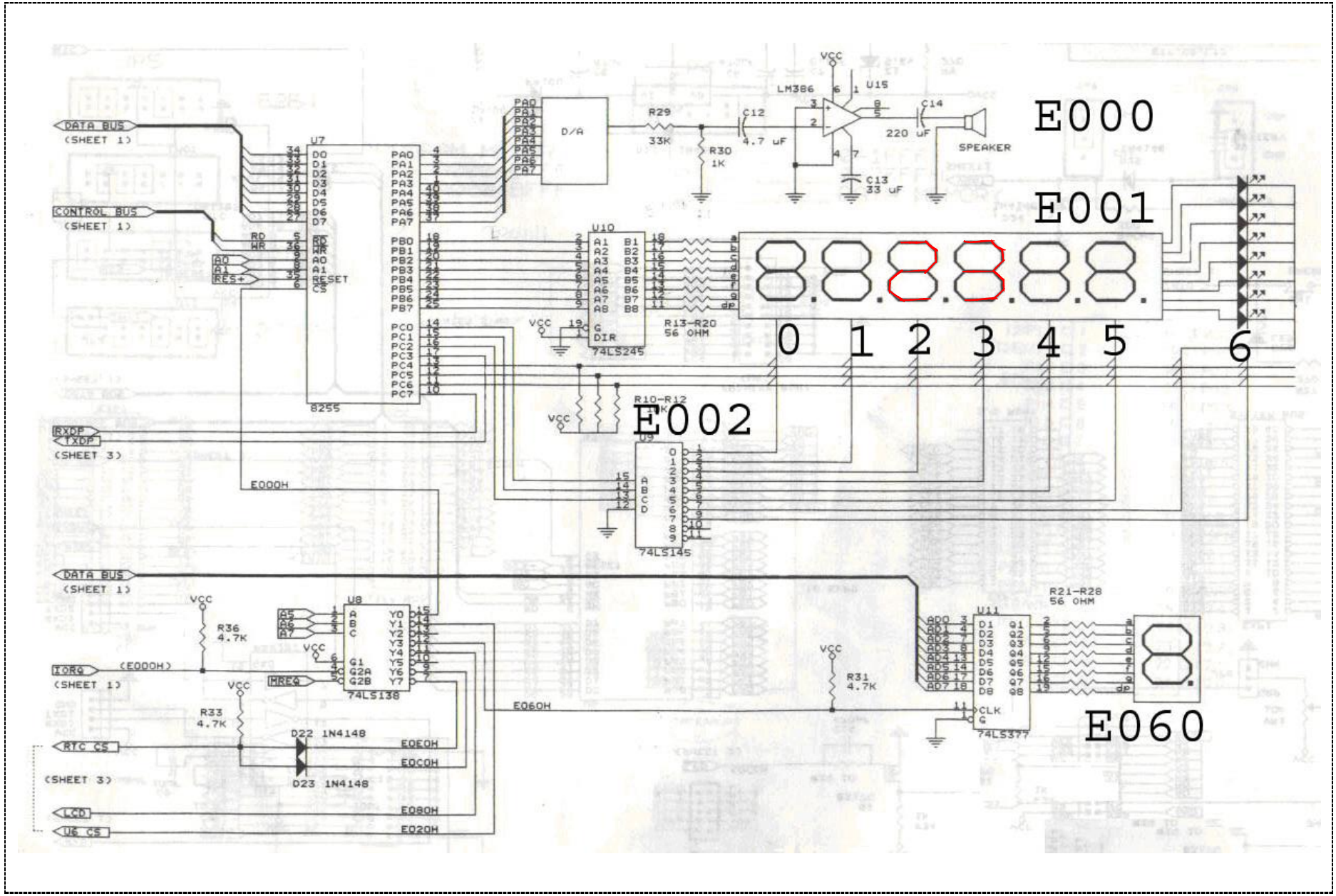
E000
E001
E002
E060
DATA BUS
(SHEET 1)
CONTROL BUS
(SHEET 1)
U7
8255
D/A
R29
33K
R30
1K
C12
4.7 uF
LM386
U15
C14
220 uF
SPEAKER
C13
33 uF
U10
74LS245
R13-R20
56 OHM
R10-R12
U9
74LS145
RXDP
TXDP
(SHEET 3)
E000H
U8
74LS138
R36
4.7K
IORQ
(E000H)
MREQ
R33
4.7K
D22 1N4148
D23 1N4148
RTC CS
E0E0H
E0C0H
LCD
E080H
U6 CS
E020H
E060H
R31
4.7K
U11
74LS377
R21-R28
56 OHM

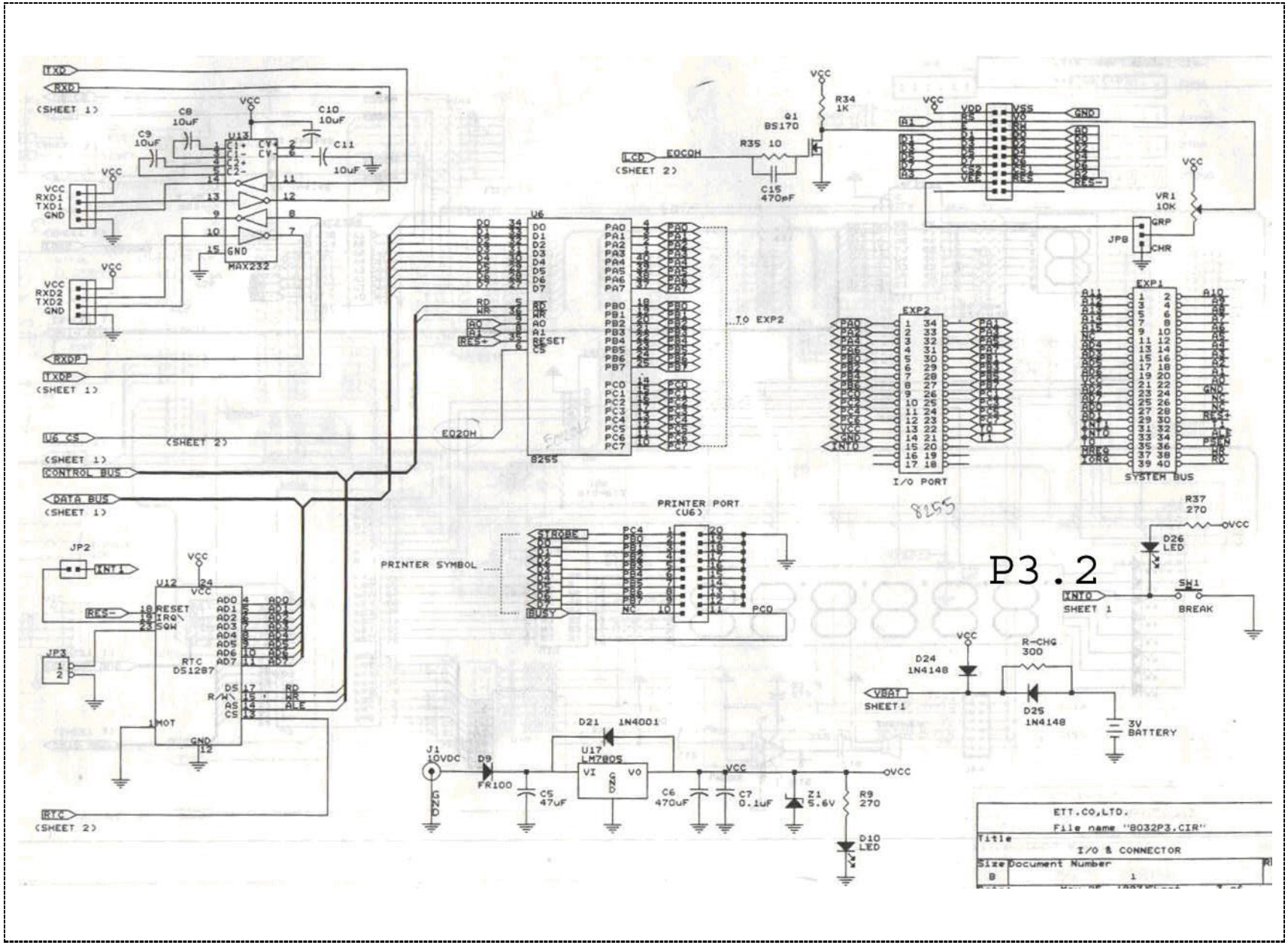
TXD
RXD
(SHEET 1)
C8 10uF
C9 10uF
C10 10uF
C11 10uF
U13
MAX232
VCC
RXD1
TXD1
GND
RXD2
TXD2
RXDP
TXDP
U6 CS
CONTROL BUS
DATA BUS
JP2
INT1
RES-
JP3
U12
RTC DS1287
RTC
(SHEET 2)
U6
8255
RESET
CS
RD
WR
A0
A1
RES+
E020H
TO EXP2
LCD
E0C0H
R35 10
C15 470pF
Q1 BS170
R34 1K
EXP2
I/O PORT
EXP1
SYSTEM BUS
VR1 10K
GRP
CHR
JP8
PRINTER PORT (U6)
PRINTER SYMBOL
STROBE
BUSY
PC0
P3.2
R37 270
D26 LED
INT0
SHEET 1
SW1
BREAK
D24 1N4148
R-CHG 300
D25 1N4148
VBAT
SHEET1
3V BATTERY
J1 10VDC
D9 FR100
D21 1N4001
U17 LM7805
C5 47uF
C6 470uF
C7 0.1uF
Z1 5.6V
R9 270
D10 LED
ETT.CO,LTD.
File name "8032P3.CIR"
Title
I/O & CONNECTOR
Size
Document Number
B
1

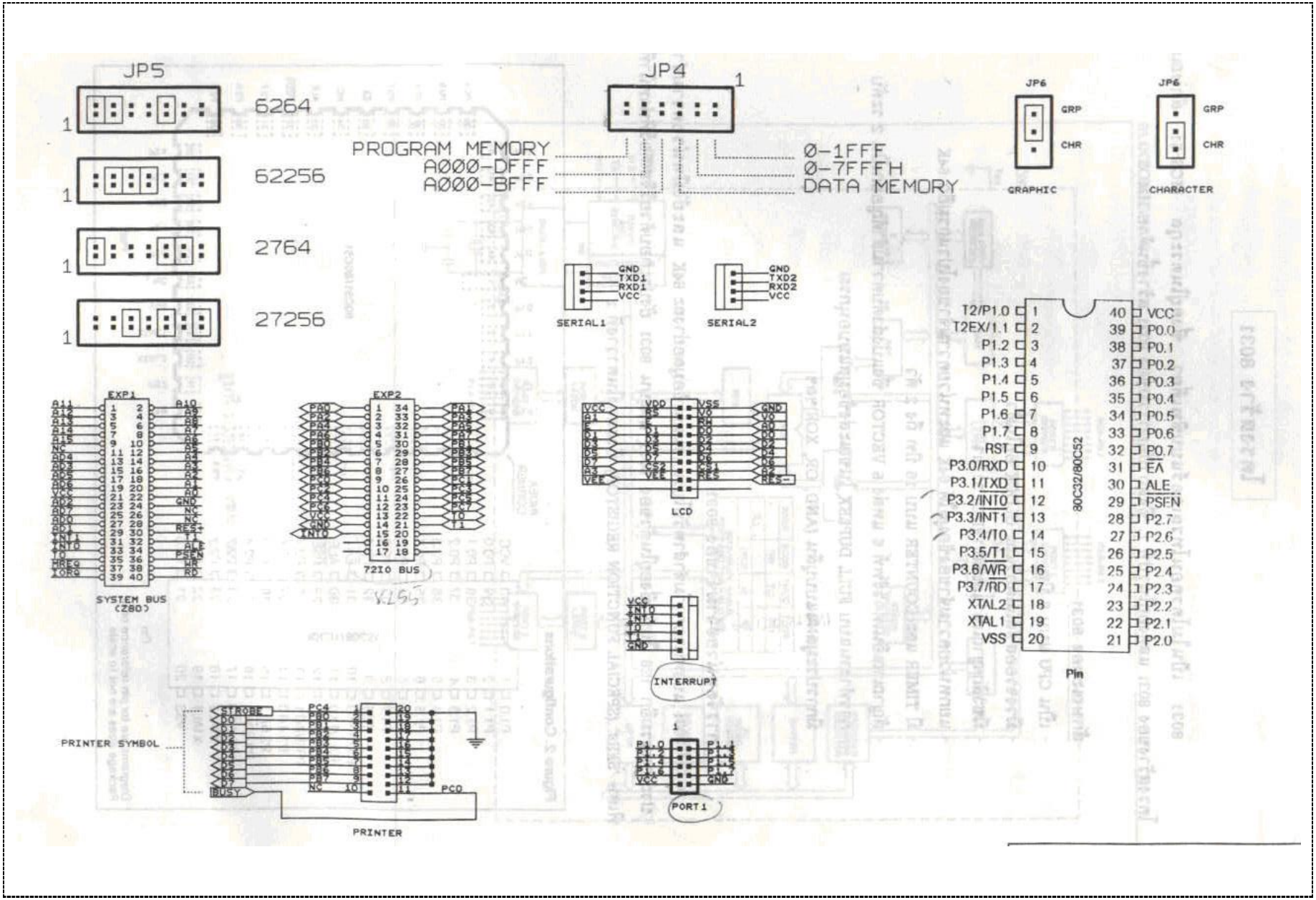
JP5
6264
62256
2764
27256
JP4
PROGRAM MEMORY
A000-DFFF
A000-BFFF
0-1FFF
0-7FFFH
DATA MEMORY
JP6
GRP
CHR
GRAPHIC
CHARACTER
SERIAL1
GND
TXD1
RXD1
VCC
SERIAL2
TXD2
RXD2
EXP1
SYSTEM BUS
(Z80)
EXP2
72I0 BUS
LCD
INTERRUPT
PRINTER SYMBOL
STROBE
BUSY
PRINTER
PORT1
T2/P1.0
T2EX/1.1
P1.2
P1.3
P1.4
P1.5
P1.6
P1.7
RST
P3.0/RXD
P3.1/TXD
P3.2/INT0
P3.3/INT1
P3.4/T0
P3.5/T1
P3.6/WR
P3.7/RD
XTAL2
XTAL1
VSS
VCC
P0.0
P0.1
P0.2
P0.3
P0.4
P0.5
P0.6
P0.7
EA
ALE
PSEN
P2.7
P2.6
P2.5
P2.4
P2.3
P2.2
P2.1
P2.0
80C32/80C52
Pin